GLOBAL LIGHT & POWER LLC
AN LED LIGHTING COMPANY

KOUKI-**PL550074 + FL440145**

6 METER POLE, 4x30W LED HEADS

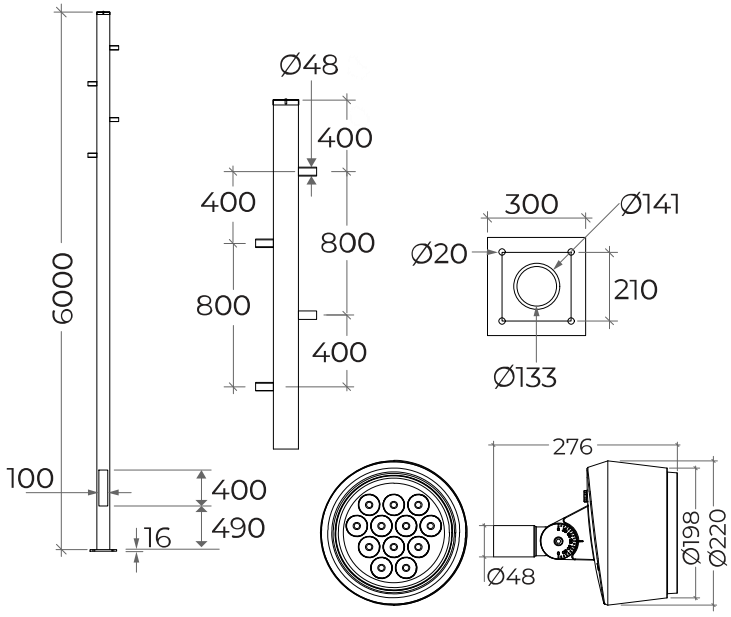

PRODUCT SPECIFICATIONS

Fixture Material	Die-cast Aluminium
Fixture Finish	Powder-coated gray
Pole Material	Hot-dip galvanized S275JR Steel
Pole Finish	Powder-coated gray RAL 9023
Optics	Acrylic Optical Lens
Glass	Clear Glass
Driver	Built-in
Binning	3 Step MacAdam
Wiring	3 meter of 3 core 1.5 mm² rubber cable
Life Span	50,000 hours

LED Chip	CREE
Power Consumption	4 x 30W
Input Voltage	180~250V AC, 50/60Hz
Pole Size	6 meters
Operating Temperature	from -20° to 65° C
Color Rendering Index	>85
Driver Protection	Short circuit
Warranty	3 years against manufacturing defects
Agency Approval	CE, RoHS

IP 66 | CE | RoHS | PHOTOMETRICS

Power (W)	Available color Temperatures	Luminous Flux			IP Rating	Available Beam Angles
		3000K	4000K	6000K		
4 x 30W	2700K 3000K 4000K 6000K	110lm/W	120lm/W	130lm/W	66	30°

Standard option.
Non-standard products may be subject to MOQ. Contact your regional sales representative for more information.

www.globallightllc.com • info@globallightllc.com • Tel: +971 4 340 44 58 • Fax: +971 4 341 10 90